Casual







KID-05.3 S
Standard

Technical documentation	Download
User Manual	PDF
Controller Manual	PDF
Declaration of Conformity	PDF
ErP	PDF
Dimensions	DWG
Software	
Installation diagrams	PDF

R-32 REFRIGERANT · DC INVERTER COMPRESSOR · DC INVERTER EXTERNAL FAN · GOLDEN FIN · HERTZ · Wi-Fi · NETHOME PLUS · SELF-CLEANING · LED DISPLAY · ECO MODE · SILENCE MODE · STAND BY · AUTOMATIC ADJUSTMENT OF THE BLADES

Set model		AKAY-C 26 DR13	AKAY-C 35 DR13	AKAY-C 52 DR12	AKAY-C 71 DR12
› Set					
Cooling capacity rated	kW	2.60	3.50	5.28	7.03
Cooling capacity min. / max.	kW	0.91 / 3.4	1.11 / 3.93	1.81 / 6.16	2.08 / 7.91
Heating capacity rated	kW	3.00	3.80	5.57	7.33
Heating capacity min. / max.	kW	0.82 / 3.37	1.09 / 4.16	1.29 / 6.74	1.61 / 7.91
Heating capacity rated at -7°C	kW	2.03	2.51	4.02	5.98
Cooling input rated	W	800	1320	1550	2600
Cooling input min. / max.	W	100 / 1240	83 / 1600	140 / 2300	420 / 3150
Heating input rated	W	950	1190	1570	2400
Heating input min. / max.	W	120 / 1200	167 / 1400	220 / 2350	300 / 2750
Heating input rated at -7°C	W	971	1069	1661	2990
EER		3.25	2.66	3.40	2.71
COP		3.15	3.20	3.55	3.05
COP at -7°C		2.09	2.35	2.42	2.00
SEER		7.0 - A++	6.5 - A++	7.2 - A++	6.1 - A++
SCOP		4.1 - A+	4.1 - A+	4.0 - A+	4.0 - A+
› Indoor unit		**KAY-CF 26 DR13**	**KAY-CF 35 DR13**	**KAY-CF 52 DR12**	**KAY-CF 71 DR12**
Power supply	V/ph/Hz	with communication	with communication	with communication	with communication
Communication wiring	mm^2	(4+T)x1,5	(4+T)x1,5	(4+T)x1,5	(4+T)x2,5
Width / Height / Depth	mm	715 / 285 / 194	805 / 285 / 194	957 / 302 / 213	1040 / 327 / 220
Net weight	kg	6.7	7.3	10	12.3
Air flow low / medium / high	m^3/h	259 / 333 / 435	310 / 430 / 540	540 / 680 / 840	662 / 817 / 980
Sound pressure	dB(A)	21.5 / 25 / 32/ 37	21.5 / 25 / 35.5/ 39.5	/ 26 / 36/ 42.5	/ 36 / 40.5/ 45
Sound power level	dB(A)	50	54	56	60
› Outdoor unit		**KAE-C 26 DR13**	**KAE-C 35 DR13**	**KAE-C 52 DR11**	**KAE-C 71 DR11**
Compressor type		Rotary	Rotary	Rotary	Rotary
Power supply	V/ph/Hz	220-240/1/50	220-240/1/50	220-240/1/50	220-240/1/50
Power wiring	mm^2	(2+T)x1,5	(2+T)x1,5	(2+T)x1,5	(2+T)x2,5
Max. intensity	A	8.18	8.18	10.7	13.3
Circuit breaker		D16	D16	D16	D16
Width / Height / Depth	mm	720 / 495 / 270	720 / 495 / 270	805 / 554 / 330	890 / 673 / 342
Net weight	kg	21	21	32.7	42.9
Air flow	m^3/h	1750	1750	2100	3500
Sound pressure	dB(A)	55	55	56	59
Sound power level	dB(A)	59	64	64	67
› Refrigerant					
Type refrigerant		R-32	R-32	R-32	R-32
GWP		675	675	675	675
Refrigerant charge	kg	0.47	0.52	1.08	1.42
t CO_2eq	tCO_2	0.32	0.35	0.73	0.96
Pre-charge meters	m	5	5	5	5
Supplementary charge	kg/m	0.012	0.012	0.012	0.024
Liquid / Gas pipe diameter	inch	1/4" / 3/8"	1/4" / 3/8"	1/4" / 1/2"	3/8" / 5/8"
Piping total length	m	25	25	30	50
Vertical piping max. length	m	10	10	20	25
› Working range					
Outdoor ambient temperature for heating min. / max.	°C	-15 / 24	-15 / 24	-15 / 24	-15 / 24
Outdoor ambient temperature for cooling min. / max.	°C	-15 / 50	-15 / 50	-15 / 50	-15 / 50

Cooling and heating capacity. Cooling and heating input. Energy efficiency: The energy coefficients are calculated under standard conditions. The actual operation conditions depend on the place in which the equipment has been installed and the use made of it.
Sound pressure: Measurement of the sound pressure is taken using an anechoic chamber at a distance of 1 m from the machine.
Supplementary charge: The initial charge of the machines is valid for the first 5 m (liquid line).
NOTE: Before installing these units, current legislation regarding refrigerant gases must be consulted.

Casual

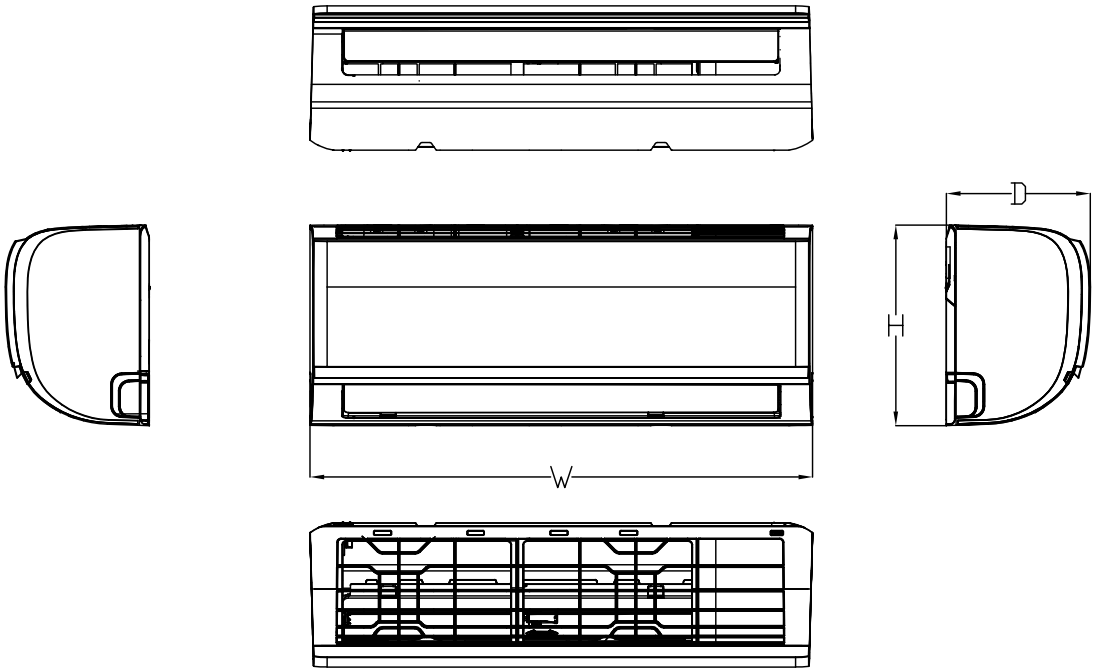

Capacity	W	D	H
9K	715	205	285
7K/12K	805	205	285
18K	958	225	301
24K	1038	229	325

Casual

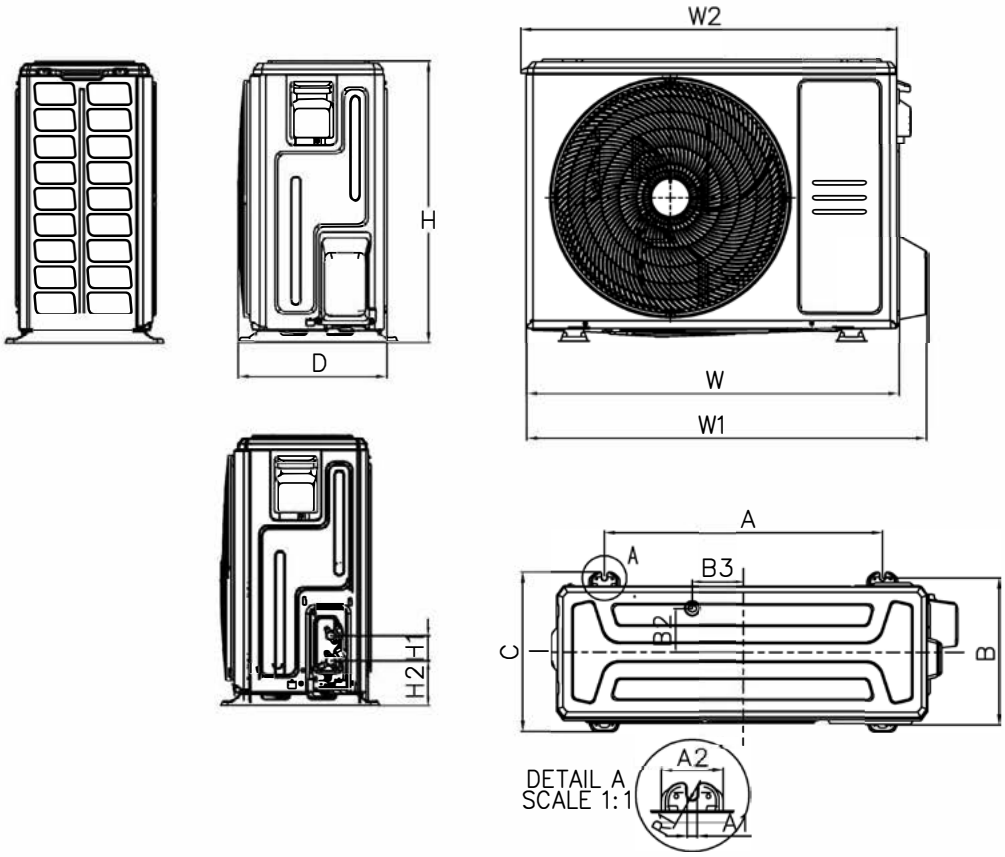

Platform	W	W1	W2	D	H	A	B	C	H1	H2	A1	A2	R1	B2	B3
X1	720	790	727	270	495	452	255	281	60	87	11.7	49	6	76.5	33
X2	765	835	784	303	555	452	286	314	60	93	10	62	5	76	18
X3	805	874	815	330	554	511	317	346	60	95	10	58	6.5	105	49
X4	890	955	895	342	673	663	354	380	60	108	12	74	6	52	61
X6	980	1073	/	415	975	616	397	440	60	114	12	76	6	111	95
D	946	1030	/	410	810	673	403	455	60	108	24	73	6	95	10

	2,6kW (09)	3,5kW (12)	5,2kW (18)	7,1kW (24)
CASUAL	X1	X1	X3	X4